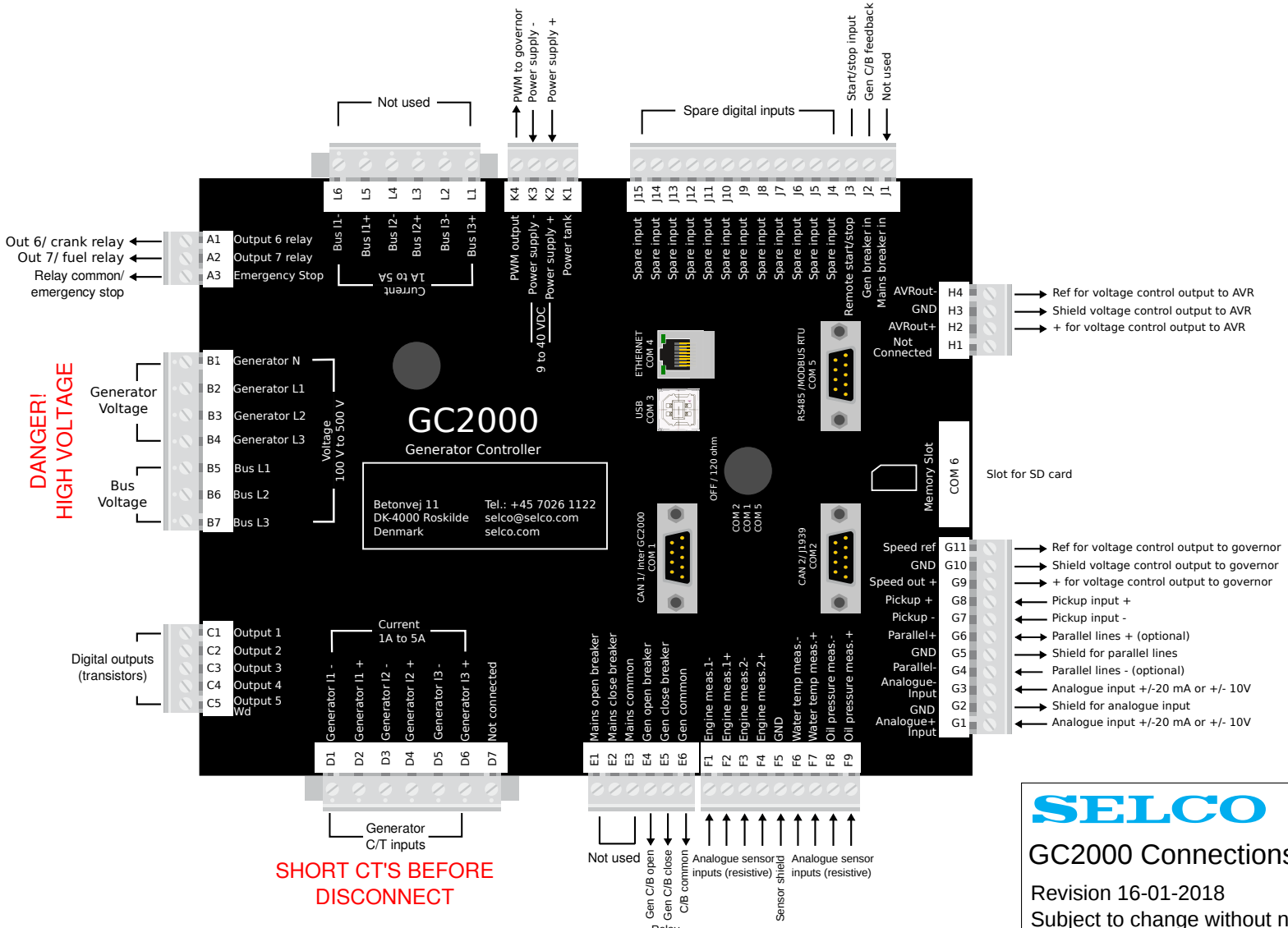

SELCO

GC2000 Connections

Revision 16-01-2018

Subject to change without notice